REV.	ZONE	DESCRIPTIONS	DWN BY	DATE

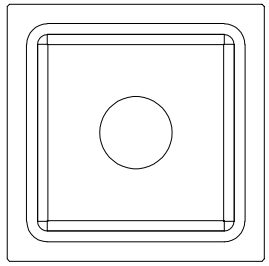

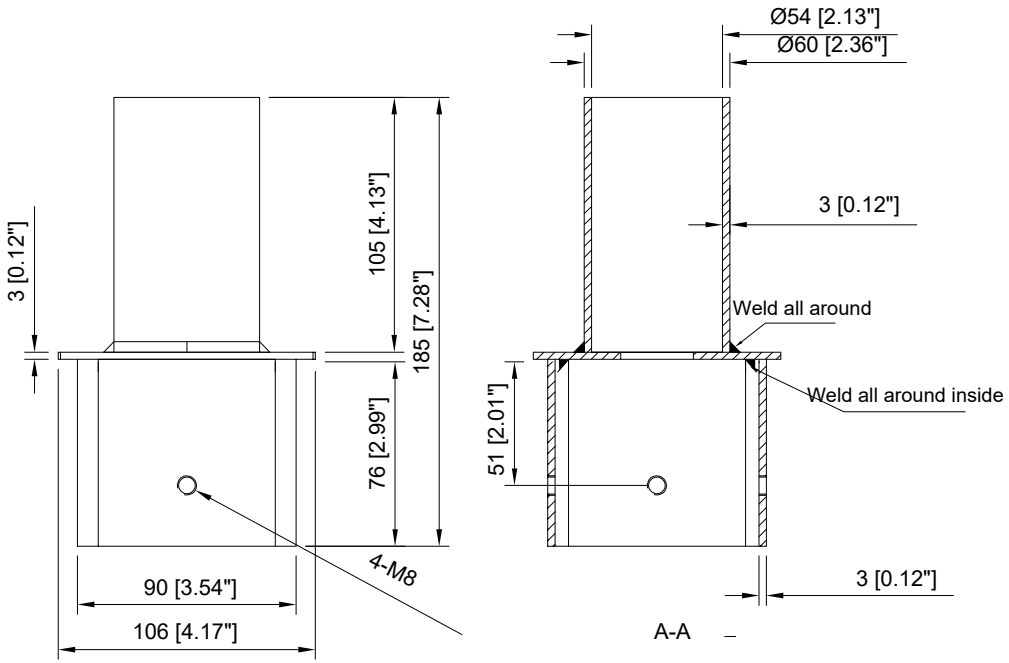

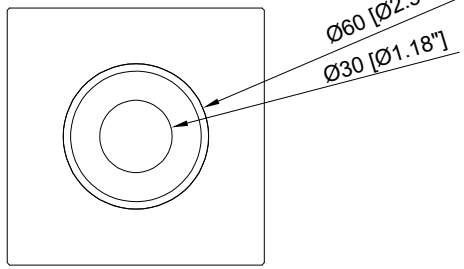

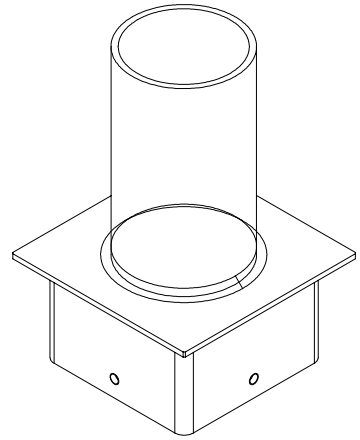

DO NOT SCALE DRAWING	PROJECTION	www.JCLIEVO.com
TOLERANCE ALL DIM. ARE IN: mm	MODEL: JCL-TS4	DATE:
PART NAME: 4" Tenon Adapter for Square Pole		S-PATH:
CAD FILE:		PART NO:
P-E FILE:		DWG. NO:
MATERIAL:		FINISH:
DWN. / CHKD. / APP.		REVISION: A0 PAGE OF
		REMARK:

(±)	0 < 3	3 < 6	6 < 30	30 < 120	120 < 315	315 < 1000
A	0.05	0.1	0.15	0.2	0.3	0.4
B	0.1	0.15	0.2	0.3	0.5	0.8
C✓	0.2	0.3	0.4	0.5	0.7	1.0
D	0.4	0.5	0.7	1.0	1.5	2.0