REV.	ZONE	DESCRIPTIONS	DWN BY	DATE

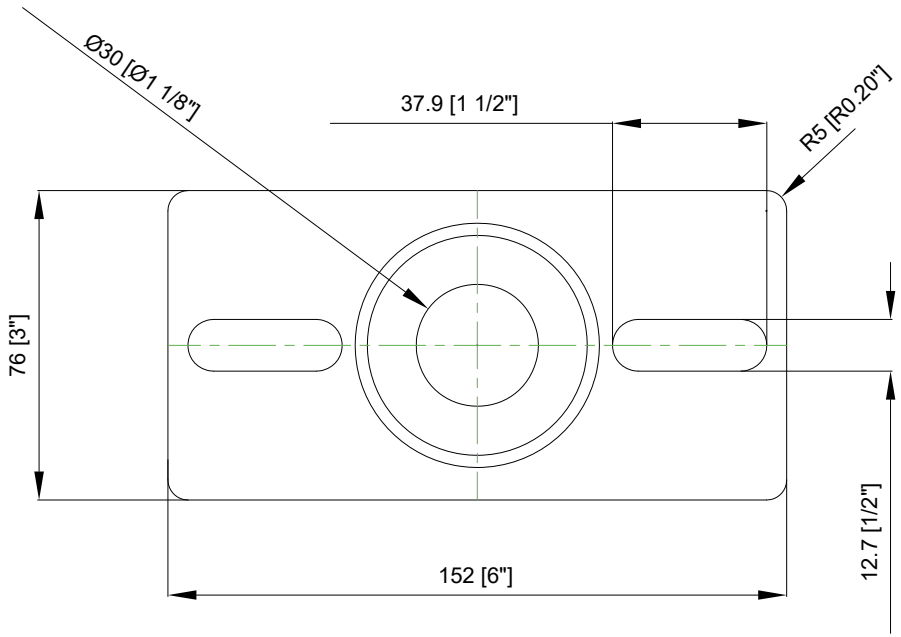

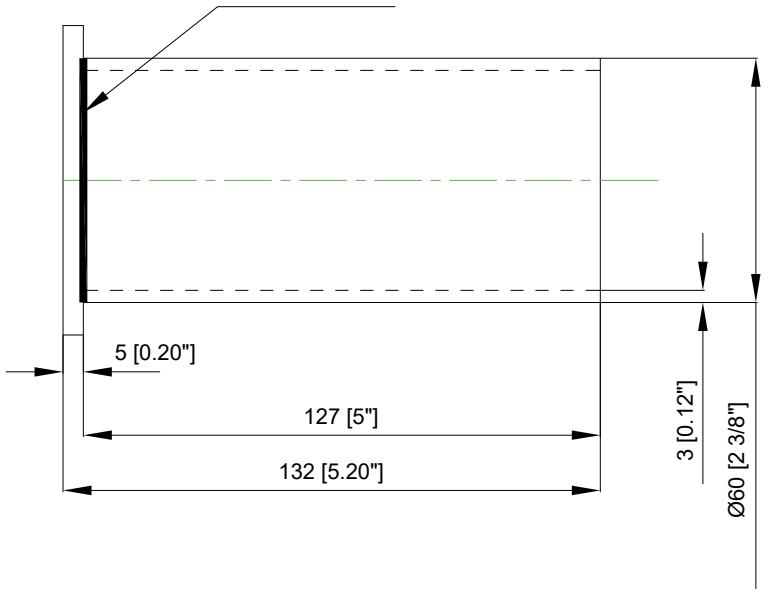

DO NOT SCALE DRAWING

PROJECTION

www.JCLIEVO.com

TOLERANCE ALL DIM. ARE IN: mm

(±)	0 < 3	3 < 6	6 < 30	30 < 120	120 < 315	315 < 1000
A✓	0.05	0.1	0.15	0.2	0.3	0.4
B	0.1	0.15	0.2	0.3	0.5	0.8
C	0.2	0.3	0.4	0.5	0.7	1.0
D	0.4	0.5	0.7	1.0	1.5	2.0

MODEL: JCL-STR

PART NAME: Side Tenon Adapter for Round Pole

CAD FILE:

P-E FILE:

MATERIAL: 1060

DWN. jmx | CHKD. | APP.

DATE:

S-PATH:

PART NO:

DWG. NO: M1012-031

FINISH:

REVISION: | PAGE OF

REMARK: