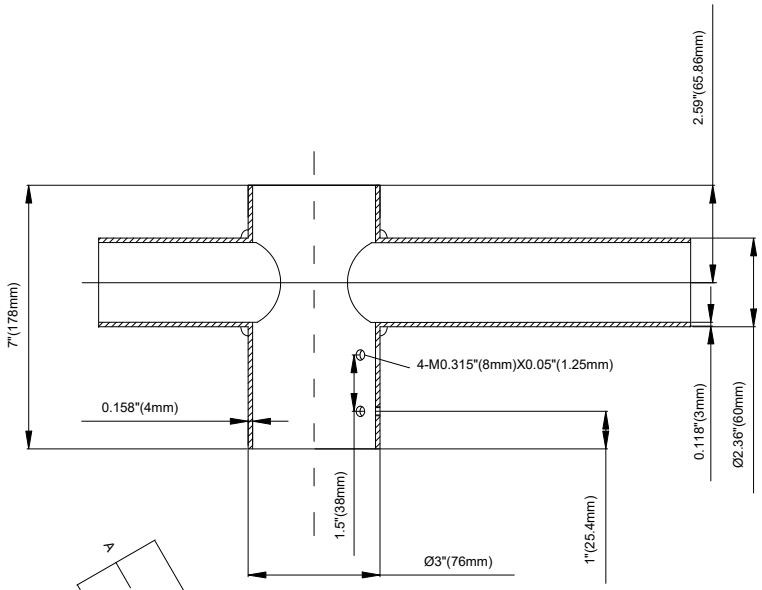

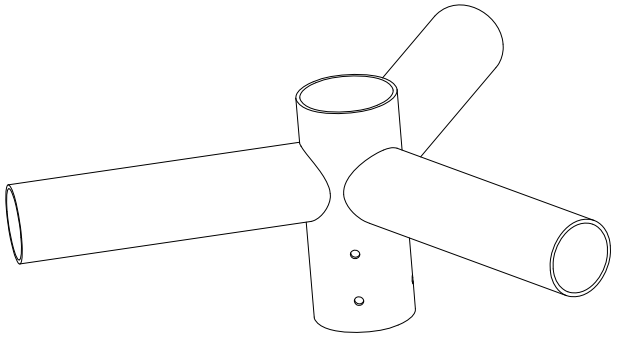

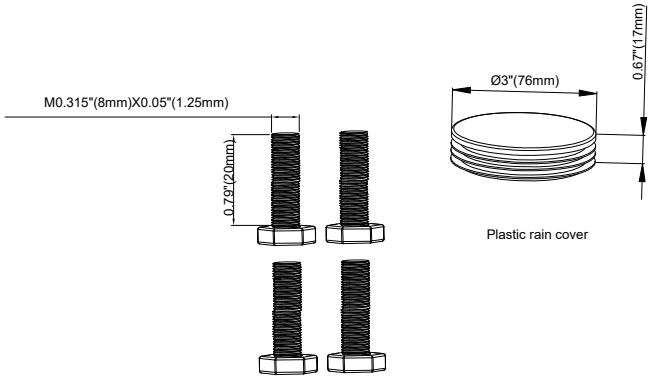

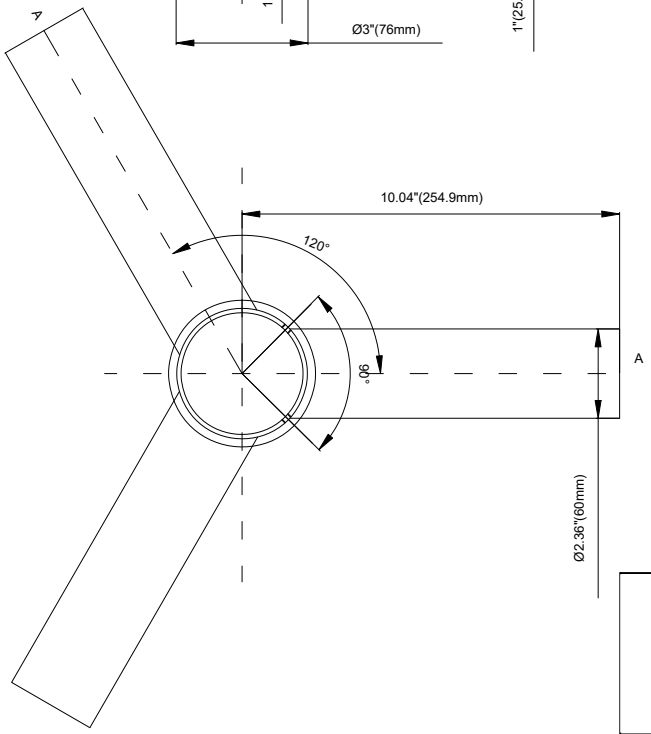

www.JCLIEVO.com									
			edition	Modifier		Time of modification	Repair the interior		
MODEL	JCL-SB3-120D	Edition	A/0	Page	1/1	Tolerance requirements: (tolerance without special requirements)			Date
PART NAME	Spoke Bracket with 3 Arms at 120Degrees	proportion		Angle		NO ± 0.2	mapping		
Specification Description		unit				.X ± 0.1 .XX ± 0.05	check		
Drawing Number		material quality				.XXX ± 0.015	examine and verify		