REV.	ZONE	DESCRIPTIONS	DWN BY	DATE

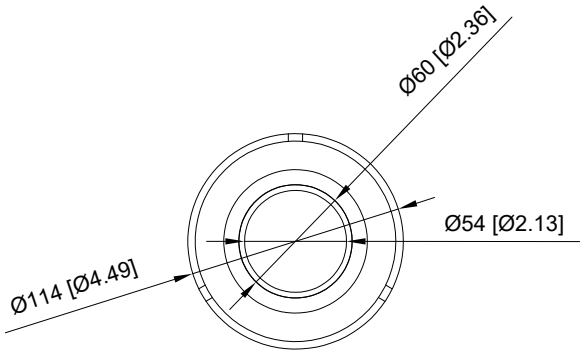

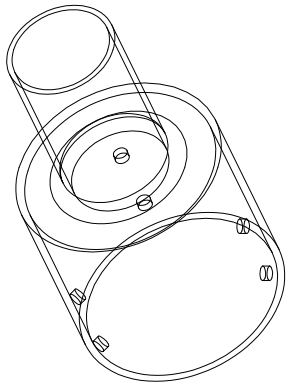

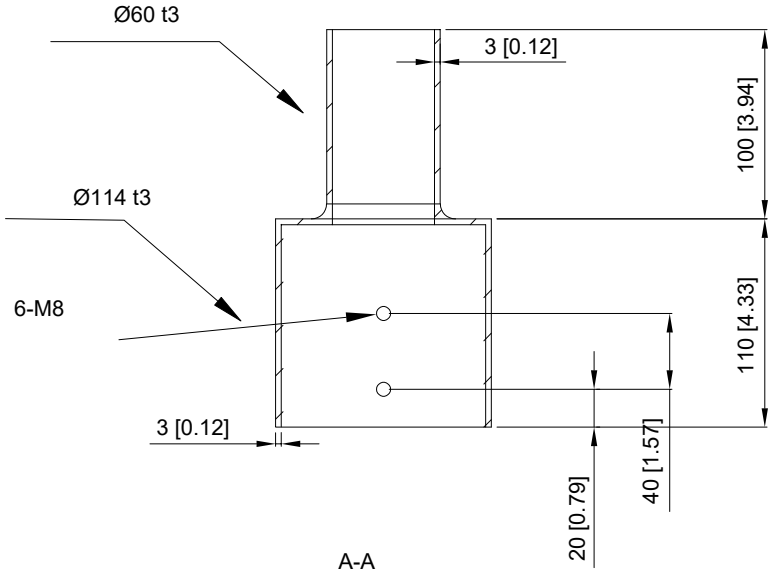

A-A

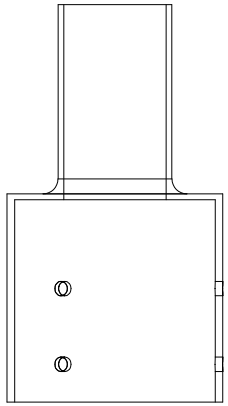

DO NOT SCALE DRAWING							PROJECTION	www.JCLIEVO.com	
TOLERANCE ALL DIM. ARE IN: mm							MODEL: JCL-TR4B	DATE:	
±	0 < 3	3 < 6	6 < 30	30 < 120	120 < 315	315 < 1000	PART NAME: Tenon Adapter for 4 inch Round Pole	S-PATH:	
A✓	0.05	0.1	0.15	0.2	0.3	0.4	CAD FILE:	PART NO:	
B	0.1	0.15	0.2	0.3	0.5	0.8	P-E FILE:	DWG. NO:	
C	0.2	0.3	0.4	0.5	0.7	1.0	MATERIAL:	FINISH:	
D	0.4	0.5	0.7	1.0	1.5	2.0	DWN. LY / CHKD. / APP.	REVISION:	PAGE OF
								REMARK:	