REV.	ZONE	DESCRIPTIONS	DWN BY	DATE

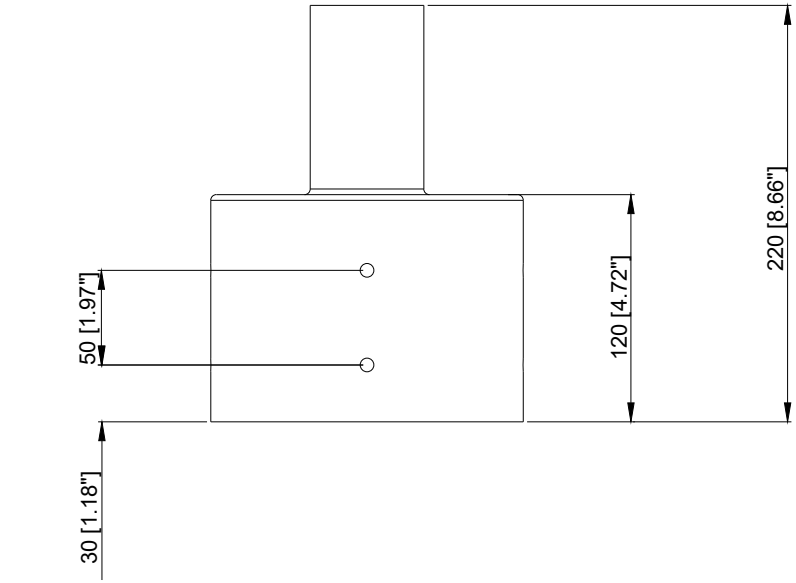

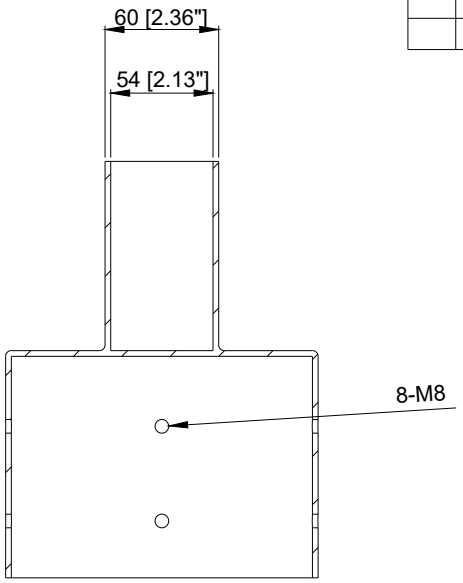

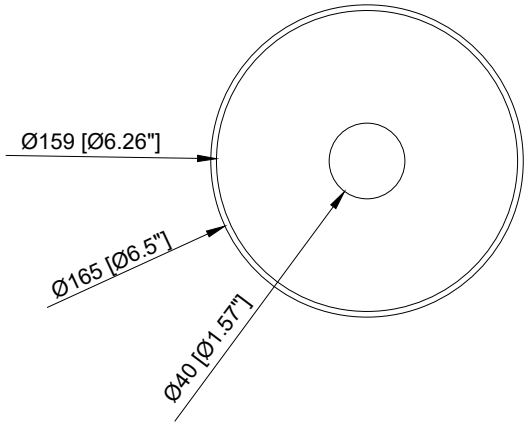

C-C

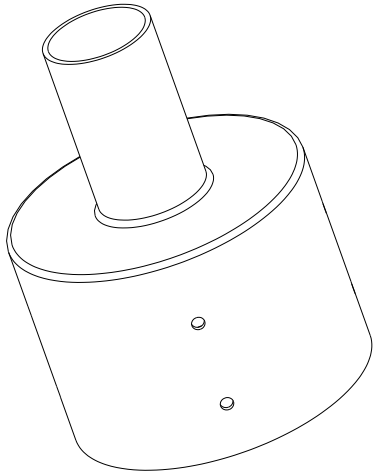

DO NOT SCALE DRAWING	PROJECTION	www.JCLIEVO.com

TOLERANCE ALL DIM. ARE IN: mm							MODEL: JCL-TR6	DATE:	
(±)	0 < 3	3 < 6	6 < 30	30 < 120	120 < 315	315 < 1000	PART NAME: Tenon Adapter for 6 inch Round Pole	S-PATH:	
A✓	0.05	0.1	0.15	0.2	0.3	0.4	CAD FILE:	PART NO:	
B	0.1	0.15	0.2	0.3	0.5	0.8	P-E FILE:	DWG. NO:	
C	0.2	0.3	0.4	0.5	0.7	1.0	MATERIAL:	FINISH:	
D	0.4	0.5	0.7	1.0	1.5	2.0	DWN. YWP / CHKD. / APP.	REVISION:	PAGE 1 OF 1
								REMARK:	