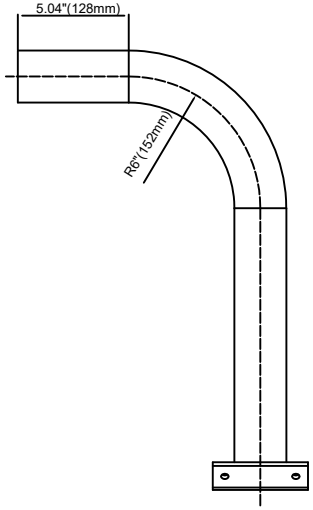

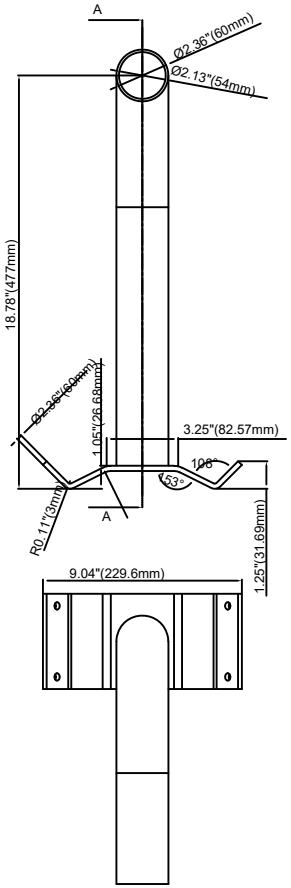

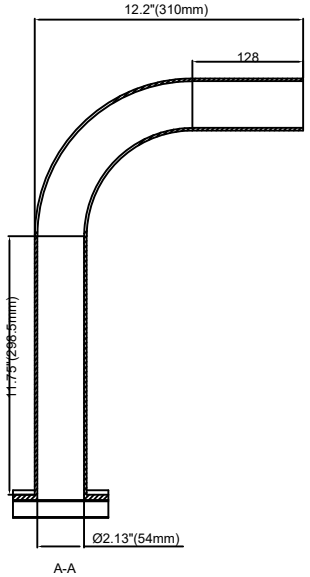

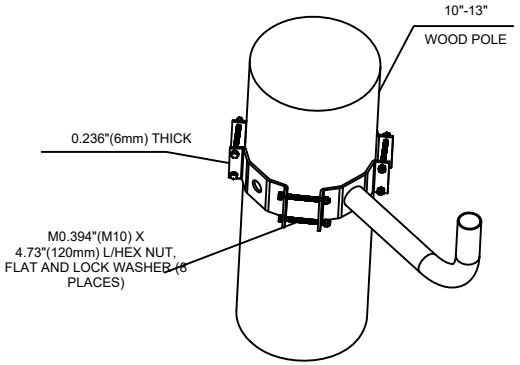

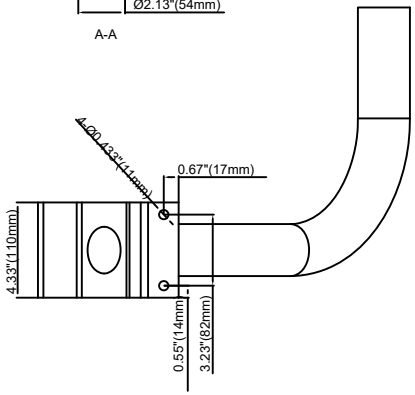

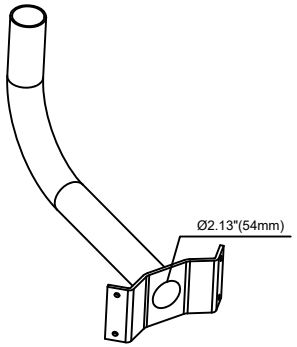

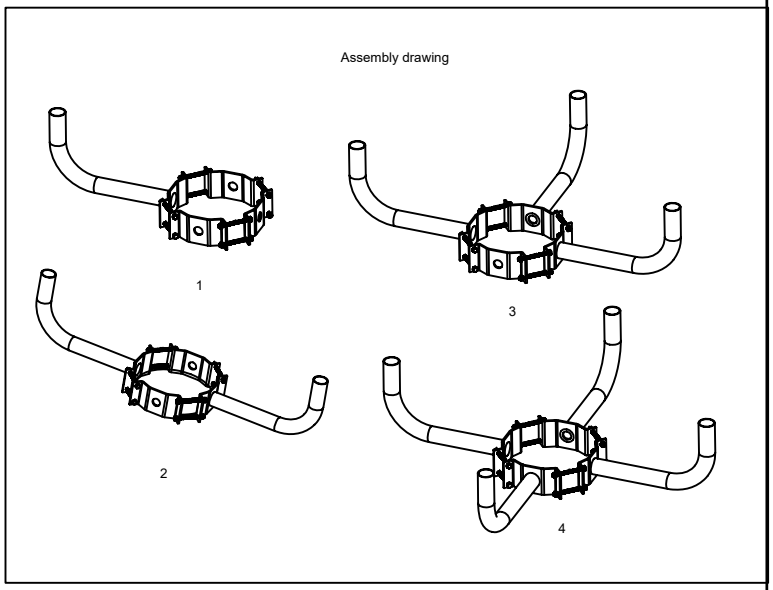

www.JCLIEVO.com									
			edition	Modifier		Time of modification	Repair the interior		
MODEL		Edition	A/0	Page	1/1	Tolerance requirements: (tolerance without special requirements)			Date
PART NAME	Wrap Around Bracket for 10-13 in Wood Poles-ARM	proportion	1:1	Angle		NO ± 0.2	mapping		
Specification Description		unit	mm			.X ± 0.1 .XX ± 0.05	check		
Drawing Number		material quality				.XXX ± 0.015	examine and verify		

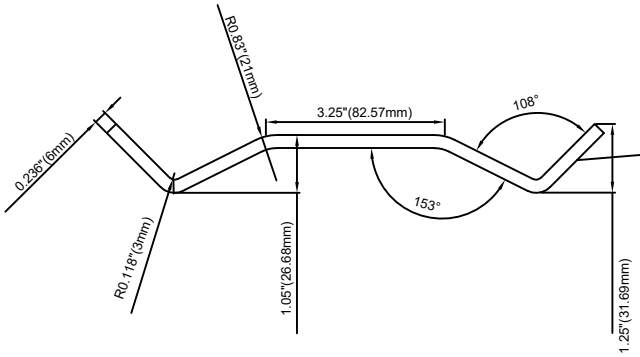

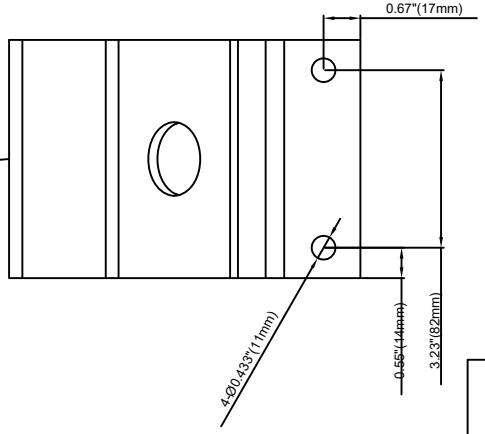

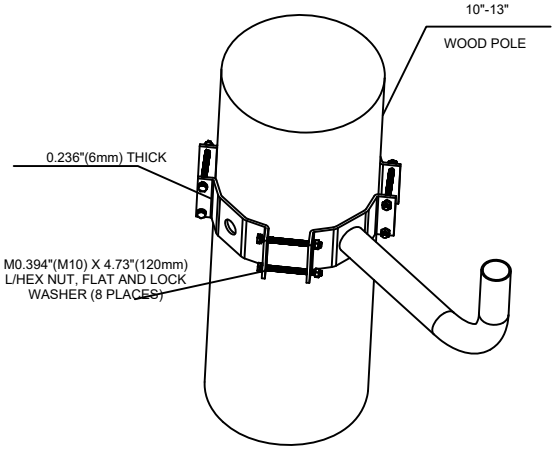

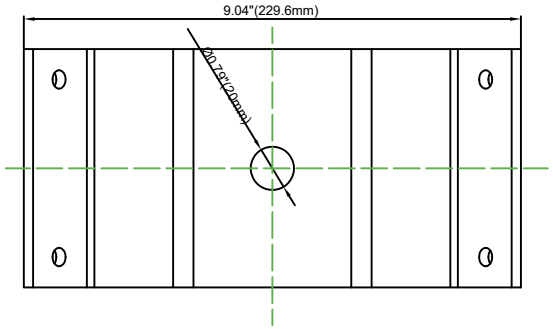

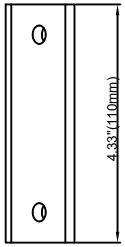

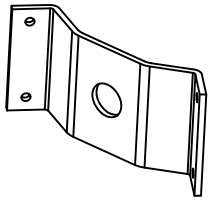

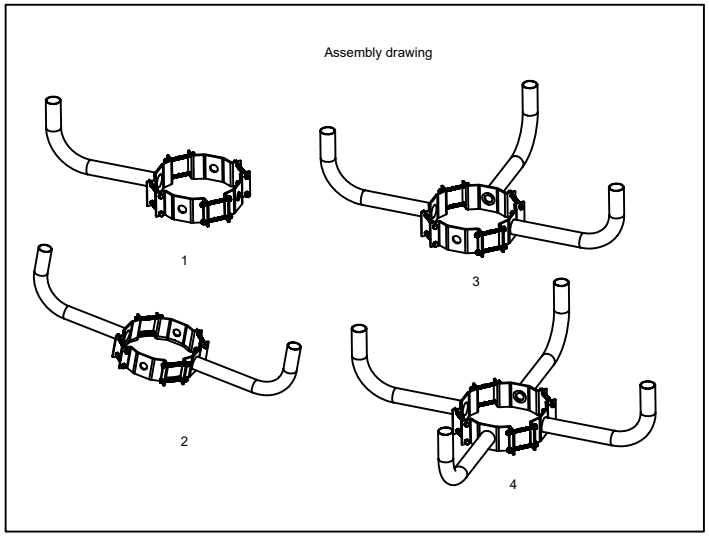

www.JCLIEVO.com									
			edition	Modifier		Time of modification	Repair the interior		
MODEL	JCL-Plate-13	Edition	A/0	Page	1/1	Tolerance requirements: (tolerance without special requirements)			Date
PART NAME	Plate for 10-13 in	proportion	1:1	Angle		NO ± 0.2	mapping		
Specification Description		unit	mm			.X ± 0.1 .XX ± 0.05	check		
Drawing Number		material quality				.XXX ± 0.015	examine and verify		